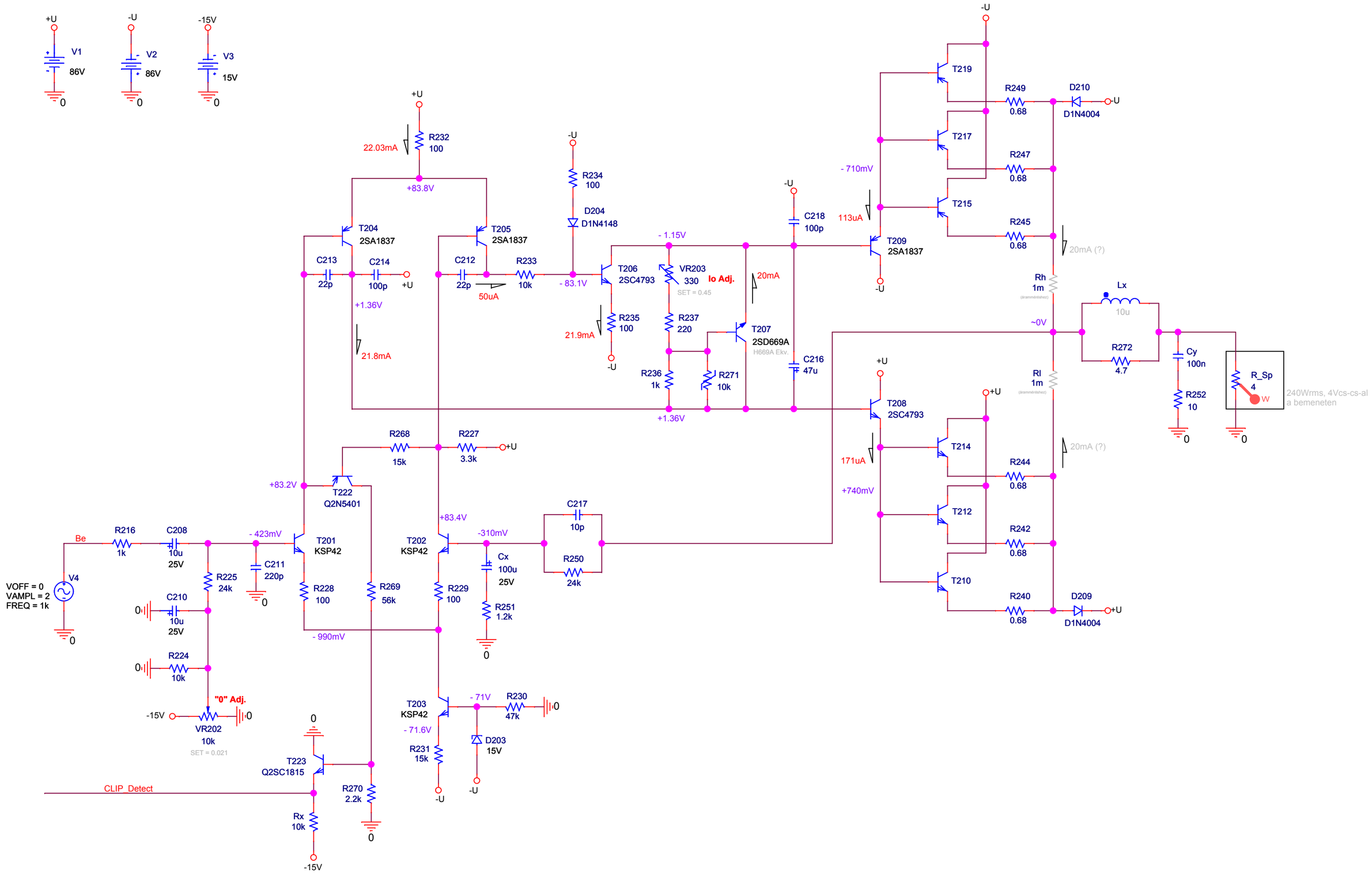
+U
V1
86V
-U
V2
86V
-15V
V3
15V
0
R232
100
22.03mA
+83.8V
R234
100
D204
D1N4148
T204
2SA1837
T205
2SA1837
C213
22p
C214
100p
C212
22p
R233
10k
50uA
+1.36V
21.8mA
- 83.1V
T206
2SC4793
- 1.15V
VR203
330
Io Adj.
SET = 0.45
20mA
R235
100
21.9mA
R237
220
T207
2SD669A
H669A Ekv.
R236
1k
R271
10k
C218
100p
C216
47u
T219
T217
T215
T209
2SA1837
- 710mV
113uA
R249
0.68
D210
D1N4004
R247
0.68
R245
0.68
20mA (?)
Rh
1m
~0V
Rl
1m
Lx
10u
R272
4.7
Cy
100n
R252
10
R_Sp
4
240Wrms, 4Vcs-cs-al
a bemeneten
T208
2SC4793
T214
T212
T210
171uA
+740mV
R244
0.68
R242
0.68
R240
0.68
D209
D1N4004
R268
15k
R227
3.3k
T222
Q2N5401
+83.2V
+83.4V
C217
10p
R250
24k
Be
R216
1k
C208
10u
25V
- 423mV
T201
KSP42
T202
KSP42
-310mV
Cx
100u
25V
R251
1.2k
V4
VOFF = 0
VAMPL = 2
FREQ = 1k
R225
24k
C211
220p
R228
100
R269
56k
R229
100
C210
10u
25V
- 990mV
R224
10k
"0" Adj.
VR202
10k
SET = 0.021
T203
KSP42
- 71V
R230
47k
- 71.6V
D203
15V
R231
15k
T223
Q2SC1815
CLIP_Detect
R270
2.2k
Rx
10k